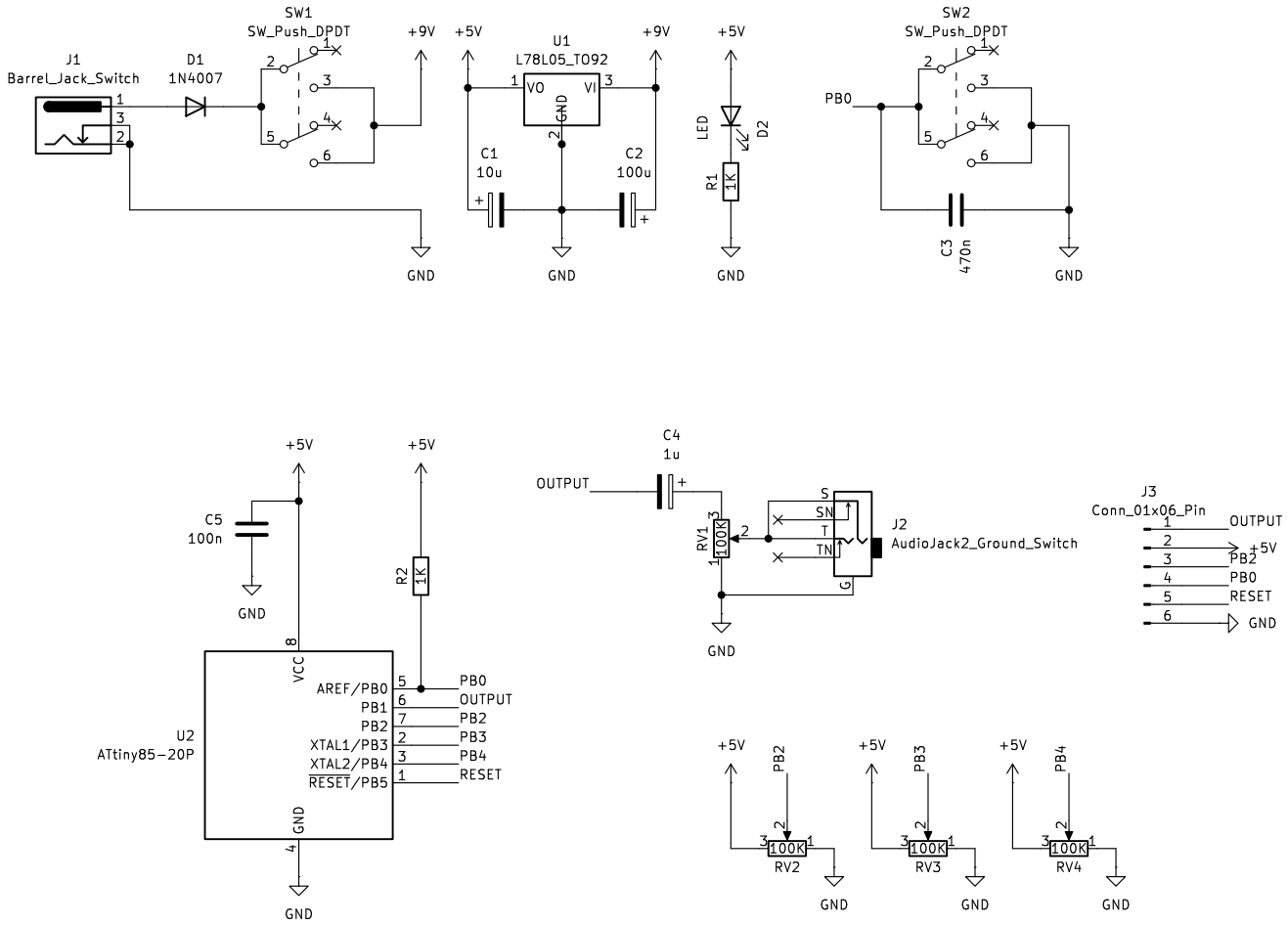

PCB for MSG (Mini Sound Generator) originally designed by Ross Fish Moffenzeef Modular.

Project:
Mini Sound Generator

Phase:
Prototype

Designed by:
vec2pt

Revision:
v1.00

Date:
20250112

Number:
1/1

Format:
A4

KiCad E.D.A. 8.0.8